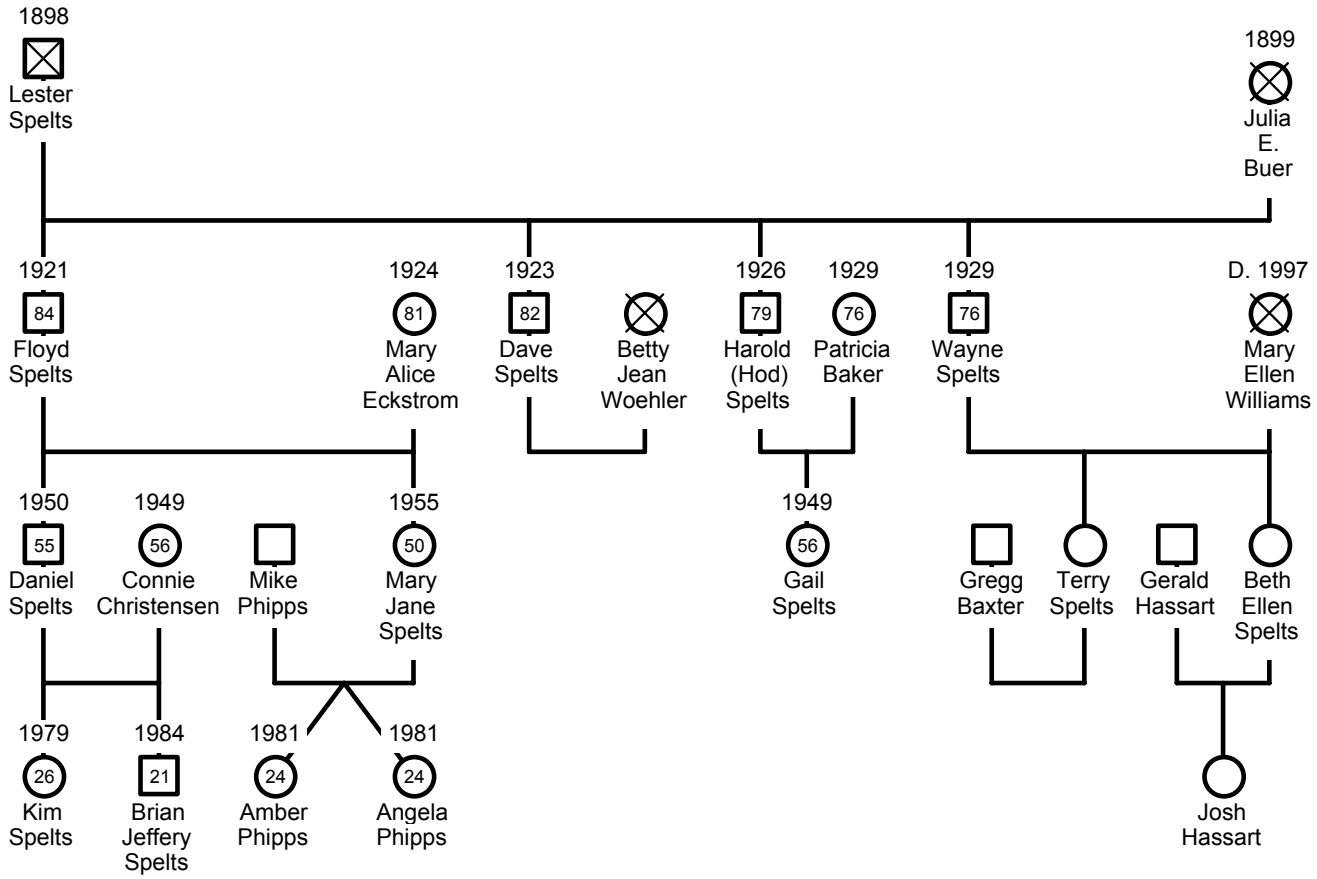
1898
Lester Spelts
1899
Julia E. Buer
1921
84
Floyd Spelts
1924
81
Mary Alice Eckstrom
1923
82
Dave Spelts
Betty Jean Woehler
1926
79
Harold (Hod) Spelts
1929
76
Patricia Baker
1929
76
Wayne Spelts
D. 1997
Mary Ellen Williams
1950
55
Daniel Spelts
1949
56
Connie Christensen
Mike Phipps
1955
50
Mary Jane Spelts
1949
56
Gail Spelts
Gregg Baxter
Terry Spelts
Gerald Hassart
Beth Ellen Spelts
1979
26
Kim Spelts
1984
21
Brian Jeffery Spelts
1981
24
Amber Phipps
1981
24
Angela Phipps
Josh Hassart